S200 LTF

Available for Fixed applications

An adaptable seating system for lecture theatres, combining our popular S200 chair with a fixed writing ledge. Designed to be installed in classrooms with flat floors or lecture theatres with raised tiering, this ergonomic product will undoubtedly enhance the learning experience.

FEATURES

- Seat widths from [1’-5 3/4”]
- Laminate writing ledge with matching edge banding for durability
- Full-height backrest upholstery for modesty
- Power and data can be incorporated

Hussey Seatway Ltd, 3 Centurion Way, Crusader Park, Warminster, BA12 8BT, U.K.
T: +44 (0)1985 847200 F:+44 (0)1985 847300 husseyseatway.com sales@husseyseatway.com

THIS DRAWING IS THE PROPERTY AND COPYRIGHT OF
HUSSEY SEATWAY LTD. COPYRIGHT OR REPRODUCTION
WITHOUT WRITTEN PERMISSION IS PROHIBITED. ©2024

S200 LTF

Available for Fixed applications

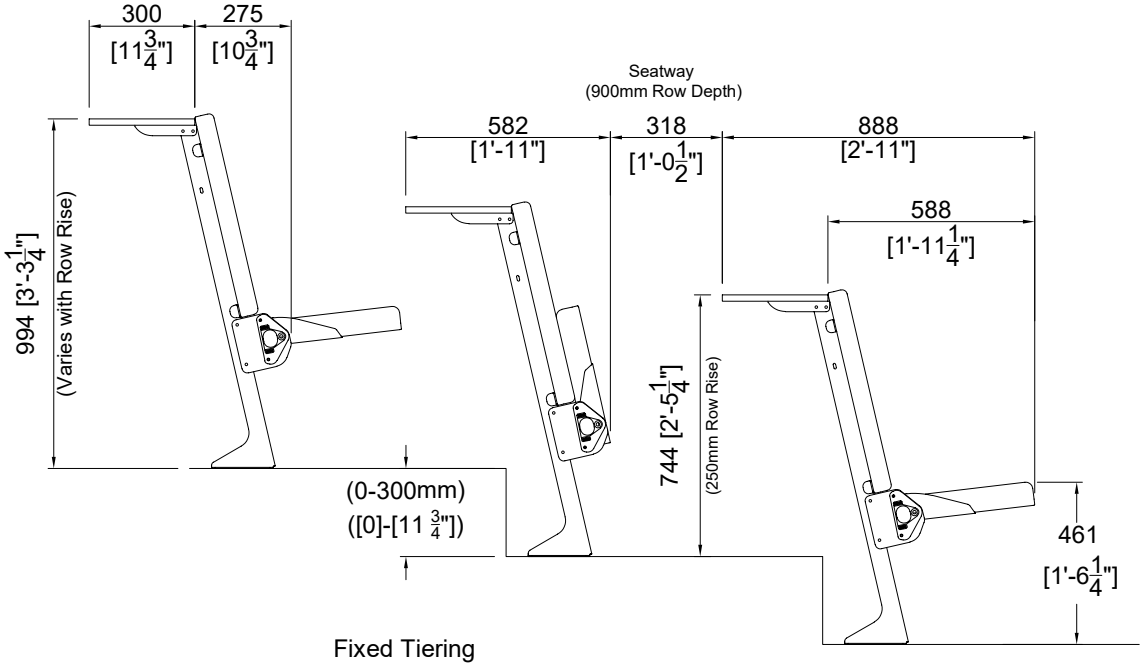

Fixed Tiering

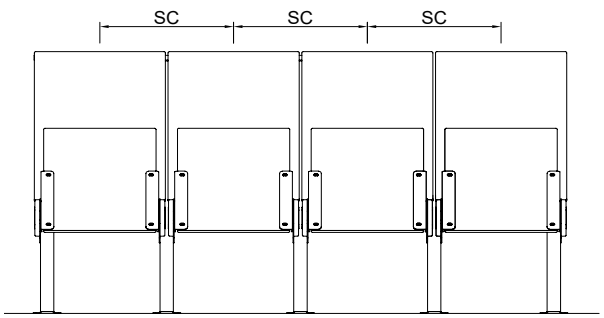

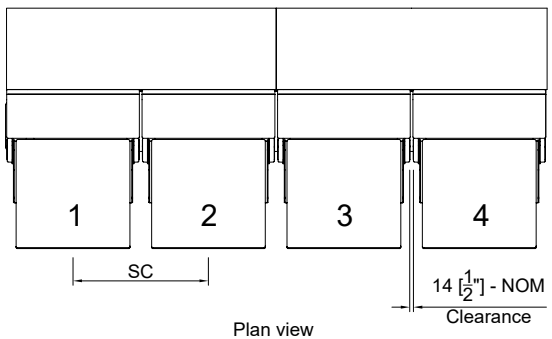

Plan view

	Seatway
Min Seat Centre (SC)	[1'-5 3/4"] - [1'-9 1/4"]
Row rise	[0] - [11 3/4"]
Row Depth	[2'-11 1/2"] - [3'-3 1/2"]

Strength & Stability
The chair satisfies the requirements of EN 12727:2000.

Fire Retardency
The fabric and foam comply with BS 5852:1990 (Source 0, 1, and 5). Other codes or European Standards can be satisfied as required.